RoHS COMPLIANT

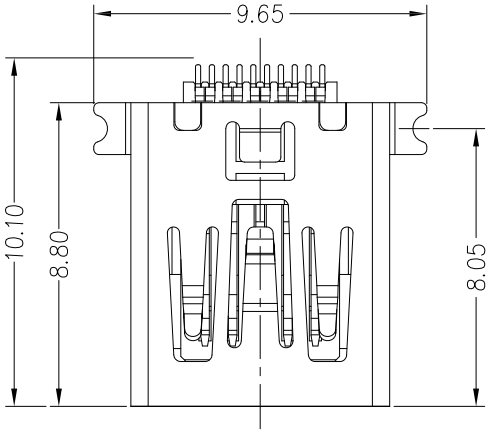

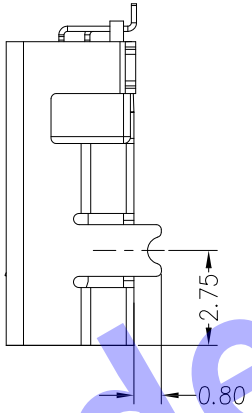

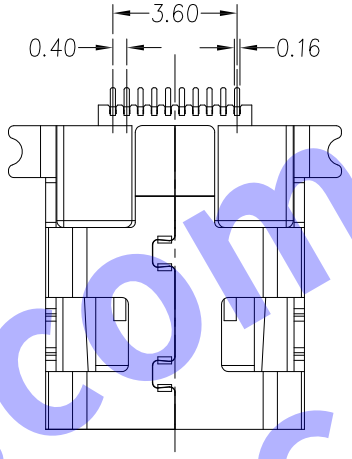

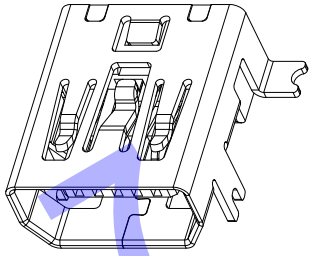

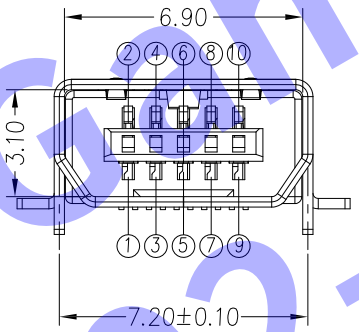

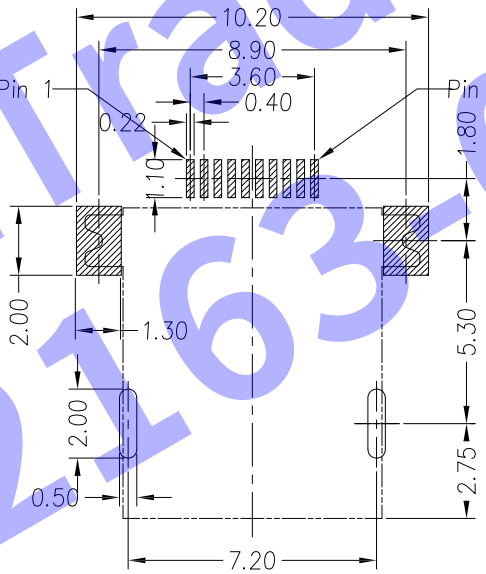

Recommended PCB Layout(T=0.8)

NOTES:
1. MATERIAL:
   INSULATOR: HI-TEMP PLASTIC UL 94V-0; BLACK.
   CONTACT: COPPER ALLOY(T=0.15MM).
   SHELL: COPPER ALLOY(T=0.30MM).
2. ELECTRICAL CHARACTERISTICS:
   CONTACT CURRENT RATING: 0.5 AMPERES.
   DIELECTRIC WITHSTANDING VOLTAGE: AC100V R.M.S.
   INSULATION RESISTANCE: 100 MΩ MINIMUM.
   CONTACT RESISTANCE: 50 MΩ MAXIMUM.
3. ENVIRONMENTAL:
   OPERATING TEMPERATURE: -25℃~+65℃.
4. ENVIRONMENTAL:
   MATING CYELES: 10,000 INSERTIONS.

GamaTrade.com
02-2163-0766~7

REV	DESCRIPTION	DATE
A	图 面 发 行	09'-10-23

QUALITY SYMBOLS
■: CRITICAL ⊠: MAJOR
▽: ZERO DEFECT ▽: S.P.C

UNIT	SCALE	TOLERANCES
mm	3:1	DIM. ±0.30 ANGLE: 3°

HDC 有限公司

ITEM	DESC	Q'TY	MATERIAL	REMAKS	PART REMAKS
APPROVED	CHECKED	DESIGN	DRAWN	PART NO.	SHT 1/1
				DESCRIPTION	MINI USB 10P AB型母座 (Philips 前插后贴) 【客户用图】
				DRAWING NO.	REV E